DTU

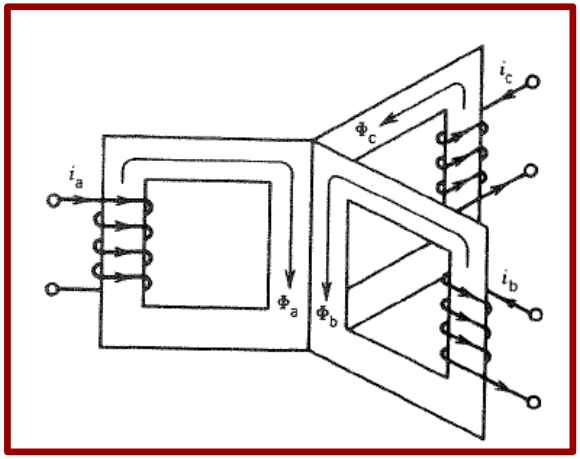
i_a
i_c
i_b
Φ_a
Φ_b
Φ_c

+

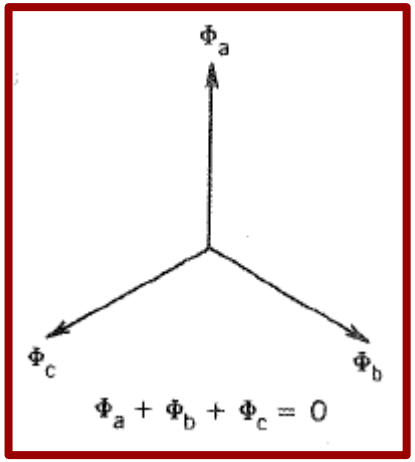
Φ_a
Φ_b
Φ_c
$\Phi_a + \Phi_b + \Phi_c = 0$

=

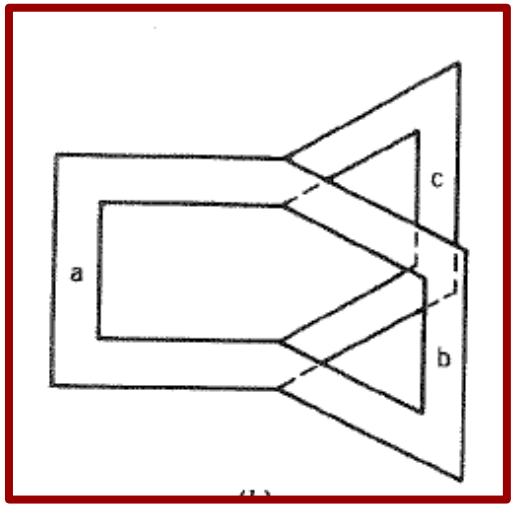
a
b
c

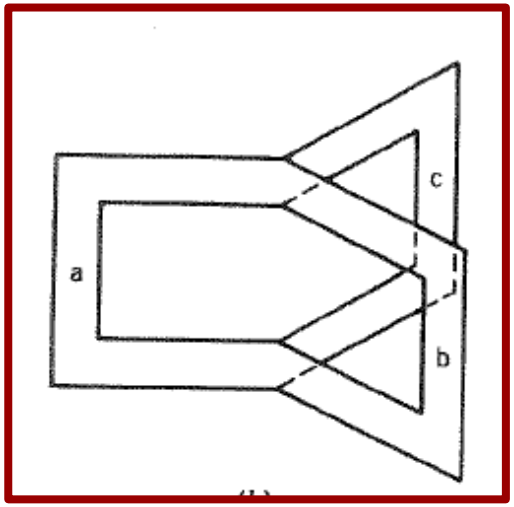
a
b
c

≈

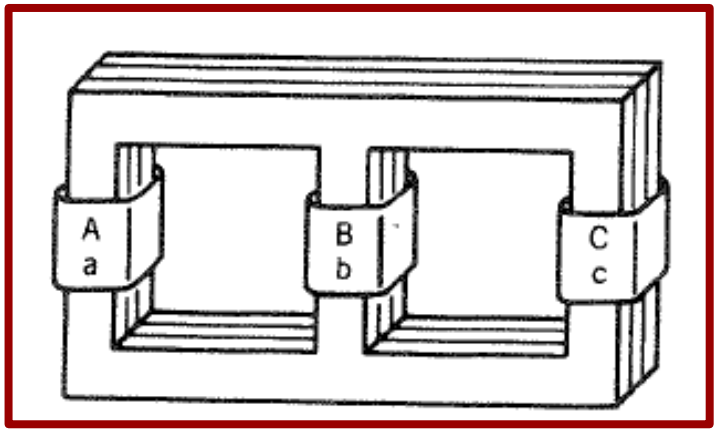
A
a
B
b
C
c

Leakage inductance calculation suggestions

Section 4.3 from the book

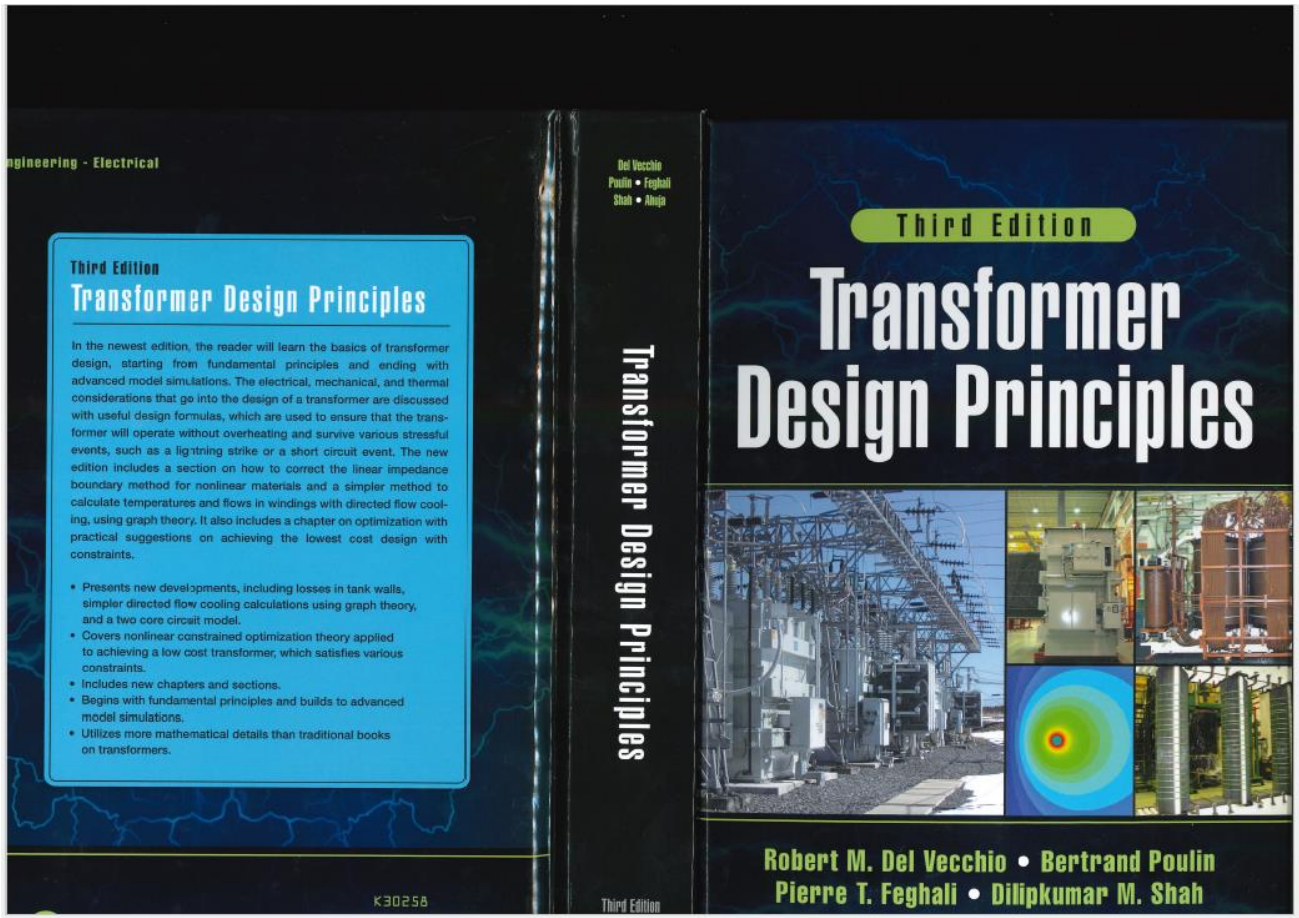

4.3 2-Winding Leakage Reactance Formula

Although the 2-winding leakage reactance is needed to model a 2-winding transformer, the 2-winding leakage reactances between pairs of windings in a multi-winding transformer are useful for modeling these transformers as well. Therefore, this is an important quantity to determine. This can be calculated by advanced analytical techniques such as Rabins' method [Rab56] or finite element methods, which solve Maxwell's equations directly. These methods are especially useful if the distribution of amp-turns along the winding is nonuniform, due, for example, to tapped out sections or thinning in sections of windings adjacent to taps in neighboring windings. However, simpler idealized calculations have proven adequate in practice, particularly at the early design stage. Such a calculation will be discussed here.

The simple reactance calculation assumes that the amp-turns are uniformly distributed along the windings. It also treats the windings as if they were infinitely long solenoids insofar as the magnetic field is concerned, although a correction for fringing at the ends is included in the final formula.

The magnetic field inside an infinitely long solenoid can be found from symmetry considerations using Maxwell's equation (4.10) expressed in integral form:

$$\oint \mathbf{H} \cdot d\tau = I \tag{4.27}$$

where the integral is around a closed loop enclosing a current I through the surface of the loop. For an ideal, infinitely tall solenoid with N turns per height h uniformly distributed,

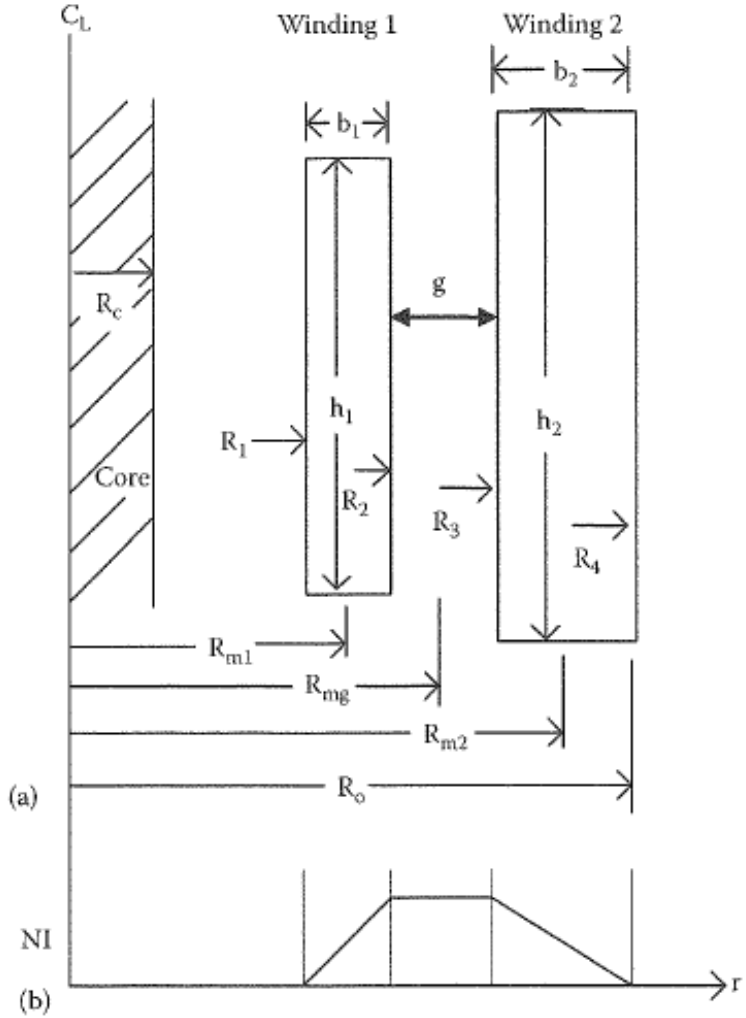

FIGURE 4.2
Parameters used in 2-winding leakage reactance calculation: (a) geometric parameters and (b) electrical parameters.

an application of this formula, together with symmetry considerations, tells us that there is a uniform axially directed field inside the solenoid with the magnitude H = NI/h and a zero field outside the solenoid.

We can apply this formula to the 2-winding transformer considered here. The parameters of interest are shown in Figure 4.2. The windings have a finite thickness so the amp-turns are a function of the radius parameter r. The total amp-turns are assumed to sum to zero for the 2 windings as is necessary for a leakage reactance calculation. Then the magnetic field as a function of radius can be found by applying (4.27) to a rectangular loop in a plane that passes through the center line of the solenoid, which encloses both windings with the vertical side of the rectangle outside the windings kept fixed, while the inner vertical side is gradually shifted towards the outer side. This results in a magnetic field distribution proportional to the amp-turn distribution shown in Figure 4.2b, that is, in the SI system:

$$H(r) = \frac{NI(r)}{h} \tag{4.28}$$

where NI(r) is the function of r shown in the figure, linearly increasing from 0 through winding 1, remaining constant in the gap, and decreasing to 0 through winding 2.

H is independent of the z-coordinate in this model and points vectorially in the z-direction. The flux density is therefore

$$B(r) = \mu_o H(r) = \mu_o \frac{NI(r)}{h} \tag{4.29}$$

The permeabilities of the materials in or between the winding are essentially that of vacuum, $\mu_o = 4\pi \times 10^{-7}$ in the (SI) system. B also points in the z-direction. We can take $h = (h_1 + h_2)/2$ as an approximation.

For calculation purposes, we need to express B as a function of r analytically. First of all, since the total amp-turns is zero, we have, ignoring the signs of the currents, $N_1 I_1 = N_2 I_2 = NI$. Therefore, we get for B(r), referring to Figure 4.2 for an explanation of the symbols,

$$B(r) = \mu_o \frac{NI}{h} \begin{cases} \dfrac{(r - R_1)}{(R_2 - R_1)}, & R_1 < r < R_2 \\ 1, & R_2 < r < R_3 \\ \dfrac{(R_4 - r)}{(R_4 - R_3)}, & R_3 < r < R_4 \end{cases} \tag{4.30}$$

The 2-winding leakage inductance of winding 1 with respect to winding 2, $L_{\ell 12}$, can be obtained from the magnetic energy in the leakage field by means of the expression

$$\frac{1}{2}L_{\ell 12}I_1^2 = \frac{1}{2\mu_o}\int_{space} B^2 dV \tag{4.31}$$

Here the order of the subscripts is important. Substituting (4.30) into the integral, we get

$$\begin{aligned}\frac{1}{2\mu_o}\int_{space} B^2 dV &= \frac{(\mu_o NI)^2}{2\mu_o h^2}\times 2\pi h\left[\int_{R_1}^{R_2}\left(\frac{r-R_1}{R_2-R_1}\right)^2 r dr + \int_{R_2}^{R_3} r dr + \int_{R_3}^{R_4}\left(\frac{R_4-r}{R_4-R_3}\right)^2 r dr\right] \\ &= \frac{\pi\mu_o (NI)^2}{h}\times\left[\frac{(R_2^2-R_1^2)}{6}+\frac{(R_2-R_1)^2}{12}+\frac{(R_3^2-R_2^2)}{2}+\frac{(R_4^2-R_3^2)}{6}-\frac{(R_4-R_3)^2}{12}\right]\end{aligned} \tag{4.32}$$

In terms of mean radii R_m, thicknesses b, and gap g shown in Figure 4.2, Equation 4.32 can be written as

$$\frac{1}{2\mu_o}\int_{space} B^2 dV = \frac{\pi\mu_o (NI)^2}{h}\left[\frac{R_{m1}b_1}{3}+\frac{b_1^2}{12}+R_{mg}g+\frac{R_{m2}b_2}{3}-\frac{b_2^2}{12}\right] \tag{4.33}$$

Thus using (4.31), we find for the leakage inductance

$$L_{\ell 12} = \frac{2\pi\mu_o N_1^2}{h}\left[\frac{R_{m1}b_1}{3}+\frac{R_{m2}b_2}{3}+R_{mg}g+\frac{b_1^2}{12}-\frac{b_2^2}{12}\right] \tag{4.34}$$

Often, the last two terms in (4.34) are dropped since they approximately cancel. The leakage reactance magnitude is $X_{\ell 12} = 2\pi f L_{\ell 12}$, so we get

$$X_{\ell 12} = \frac{(2\pi)^2 \mu_o f N_1^2}{h}\left[\frac{R_{m1} b_1}{3} + \frac{R_{m2} b_2}{3} + R_{mg} g + \frac{b_1^2}{12} - \frac{b_2^2}{12}\right] \tag{4.35}$$

The per-unit impedance of winding 1 is

$$Z_{b1} = \frac{V_{b1}^2}{(VI)_{b1}} = \frac{N_1^2 (V_{b1}/N_1)^2}{(VI)_{b1}} \tag{4.36}$$

where

$(VI)_{b1}$ is the base volt-amps (power) per phase

V_{b1}/N_1 is the base Volts/turn for winding 1

Letting x denote the per-unit reactance, where $x = X_{\ell 12}/Z_{b1}$, we get

$$x = \frac{(2\pi)^2 \mu_o f (VI)_{b1}}{(V_{b1}/N_1)^2 h}\left[\frac{R_{m1} b_1}{3} + \frac{R_{m2} b_2}{3} + R_{mg} g + \frac{b_1^2}{12} - \frac{b_2^2}{12}\right] \tag{4.37}$$

We left the subscripts off x because the per-unit reactance does not depend on the order of the windings. This is because the base power rating $(VI)_b$ and the base volts per turn (V_b/N) are the same for both windings. In contrast the leakage reactance, as opposed to the per-unit value, is proportional to the square of the winding turns in the first winding as seen in (4.35).

In order to correct for flux fringing at the winding ends, it has been found that a good approximation is to increase h by the amount

$$s = 0.32(R_o - R_c) \tag{4.38}$$

where

R_o is the outer radius of the outermost coil

R_c is the core radius

A fringing correction factor has also been developed by W. Rogowski that is widely used [Blu51]. Thus we obtain

$$x = \frac{(2\pi)^2 \mu_o f (VI)_b}{(V_b/N)^2 (h+s)} \left[\frac{R_{m1} b_1}{3} + \frac{R_{m2} b_2}{3} + R_{mg} g + \frac{b_1^2}{12} - \frac{b_2^2}{12} \right] \tag{4.39}$$

for the per-unit 2-winding reactance.

These analytical formulas such as (4.39) are useful for providing insight into achieving the required transformer reactances. For example, if one wants to increase the high to low-voltage windings reactance in order to reduce the fault currents and hence the forces on these windings during a fault, this could be achieved by increasing the high to low gap, g, or reducing the overall winding height, h.